Features

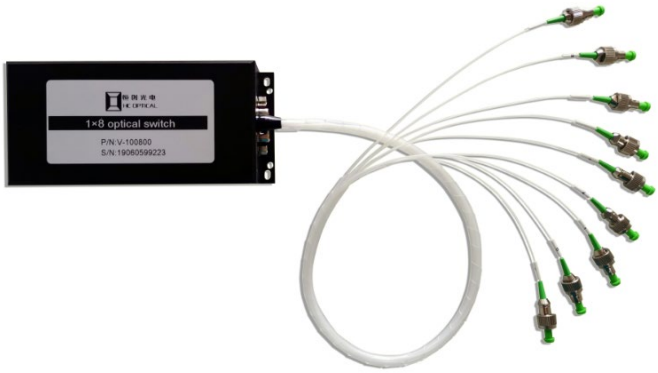

- Low insertion loss
- Wavelength range
- Low crosstalk
- High stability and reliability
- Parallel Interface (TTL)
- Modularized Design

Applications

- Laboratory development
- system monitoring
- configuration OADM
- Metropolitan area network
- Multiple light monitoring
- Optical fiber sensing
- Remote optical fiber monitoring system

Technical parameters

Model	HC-FSW-1×N		
Wavelength Range nm	800~1100(MM)	1400~1700 (MM)	1250~1650 (SM)
Test Wavelength nm	850/980	1550	1310/1490/1550/1625
Insertion Loss dB	Typ:0.6 Max:1.0	Typ:0.6 Max:1.0	Typ:0.8 Max:1.3
Return Loss dB	SM≥50、MM≥30		
Channel crosstalk dB	SM≥55、MM≥50		
PDL dB	≤0.05		
PDL dB	≤0.25		
TDL dB	≤0.25		
Repeatability dB	≤±0.02		
Working voltage V	+5 (DC)		
The service life of the time	$\geq 10^7$		
Switch time ms	≤10 (Adjacent channel switching)		
Optical Power mW	≤500		
Operating Temperature ℃	-20～+70		
Storage Temperature ℃	-40～+85		

Attention: The above is the index without connection head;

Pin definition

DB9 (TTL level) :

Pin number	Signal direction、type (In/Out/Power)	Pin definition	Function Description
1	In	D0	Data bit D3~D0 are a binary number , D3 is high, D0 is low.Up to 16 optical switches can be controlled with 4 data bits. Where 0000b = channel 1 ; 1111b= channel 16.When used, data is sent based on the actual number of channels of the optical switch.
2	In	D1	
3	In	D2	
4	In	D3	
5	In	/Reset	Low level reset to channel 0, high level data bit available
6	Out	/Ready	Low level ready to reset or receive data
7	Out	Error	High level indicates that the optical module is operating incorrectly.
8	Power	GND	Ground wire
9	Power	DC 5V	DC 5V , 1.0A Working power supply

DB15（TTL level）:

Pin number	Signal direction、type (In/Out/Power)	Pin definition	Function Description
2	In	D0	Data bit D5~D0 are binary Numbers , D5 is high ,D0 is low。The 6-bit binary number can control up to 64 optical switching。Where, 000000b = channel 1;111111 b = channel 64。Data should be sent according to the actual optical path of the optical switch。
3	In	D1	
4	In	D2	
5	In	D3	
6	In	D4	
10	In	D5	
11	In	/Reset	Low level reset, high level data bit effective。
7	Out	/Ready	Low level ready to reset or receive data。
8	Out	Error	A high level indicates an error has occurred。
15	Power	5V	Digital circuit power supply
12	Power	5V	The motor power
1 , 9	Power	Ground	Common ground
13 , 14	Not connected		

Overall dimensions L×W×H (mm)

1XN (2<N≤16) Type A:120×40×32

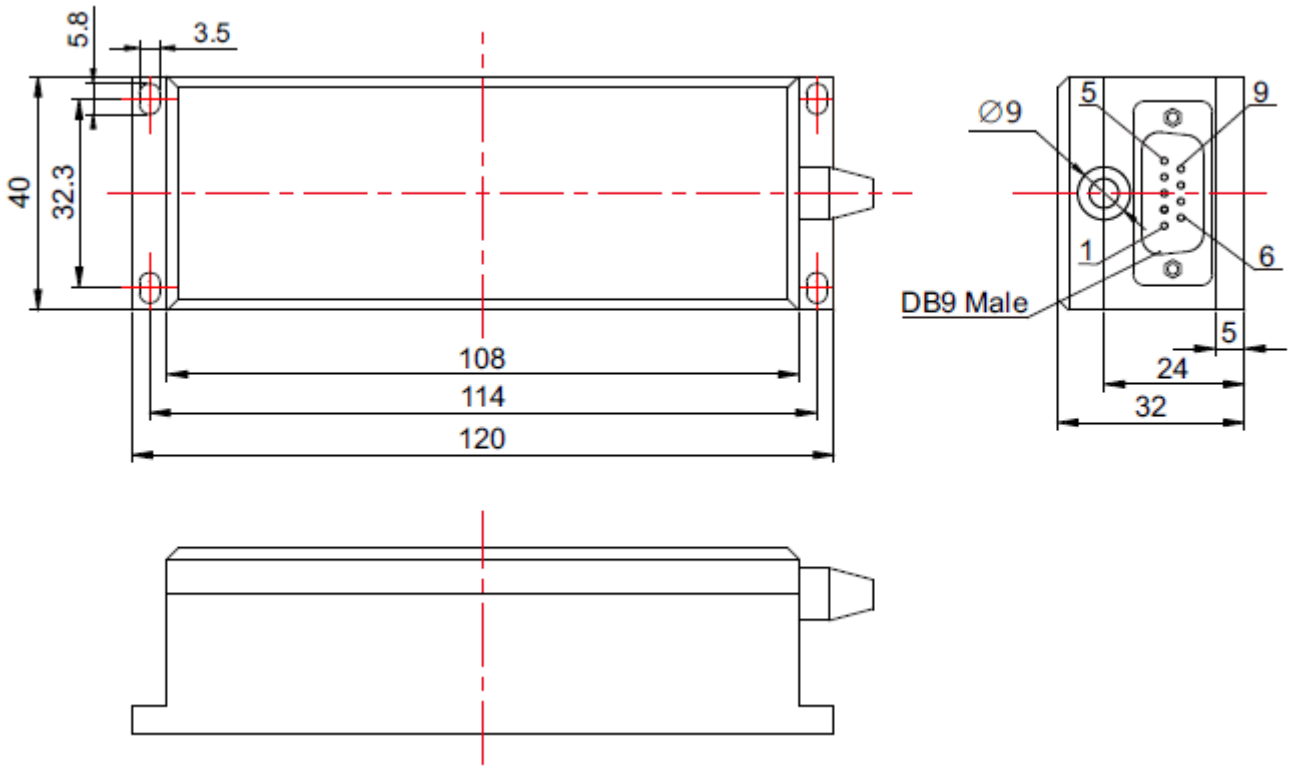

1XN (2<N≤16) Type B: 135×60×35

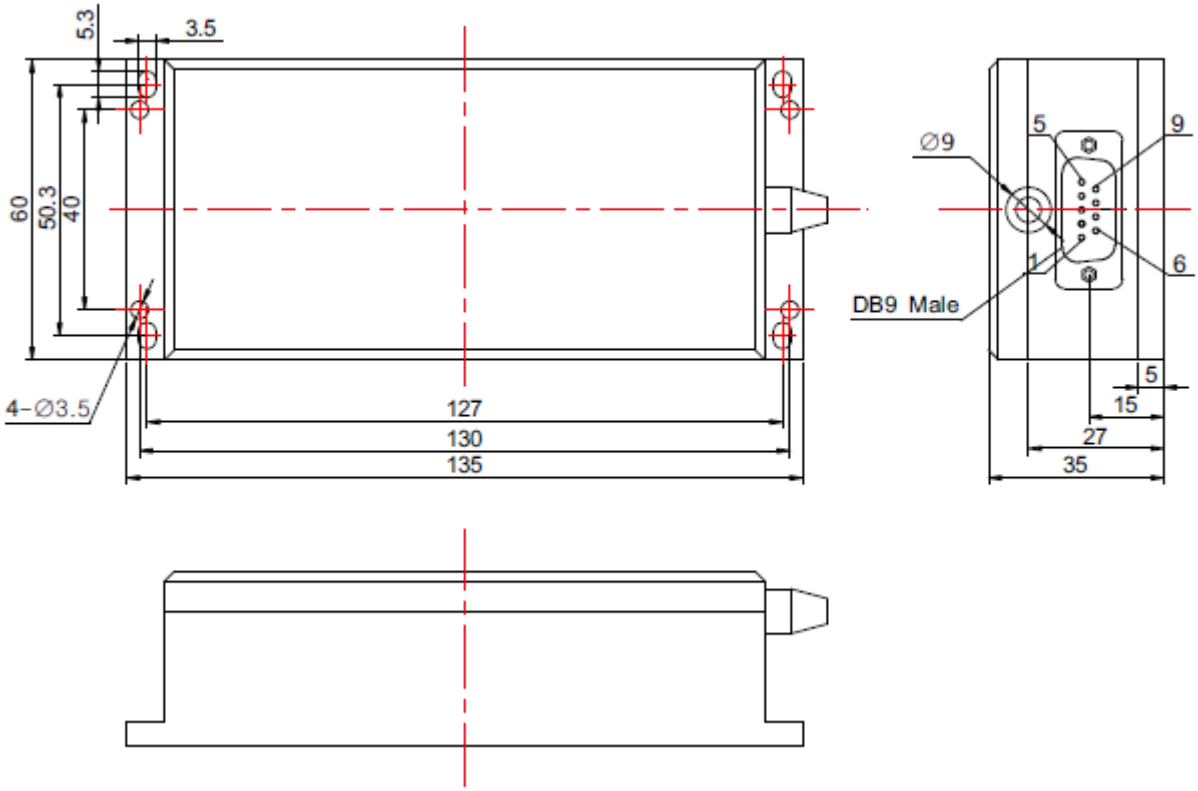

1XN (2<N≤16)　　Type C: 135×40×32

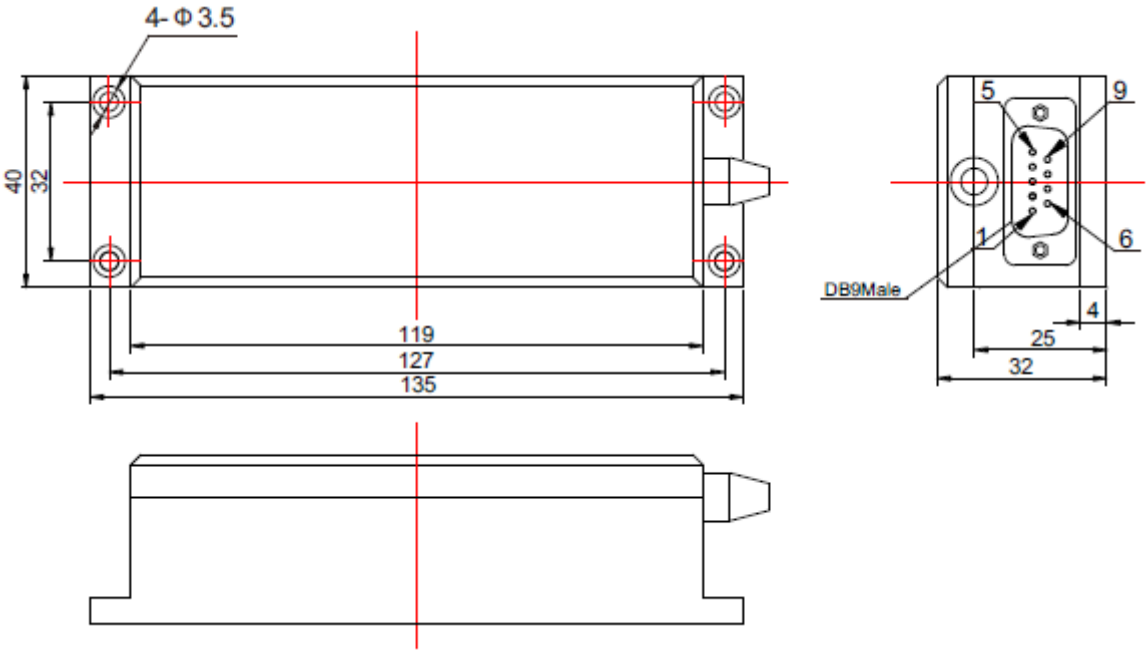

1×N（17≤N≤32）　Type A:120×50×50

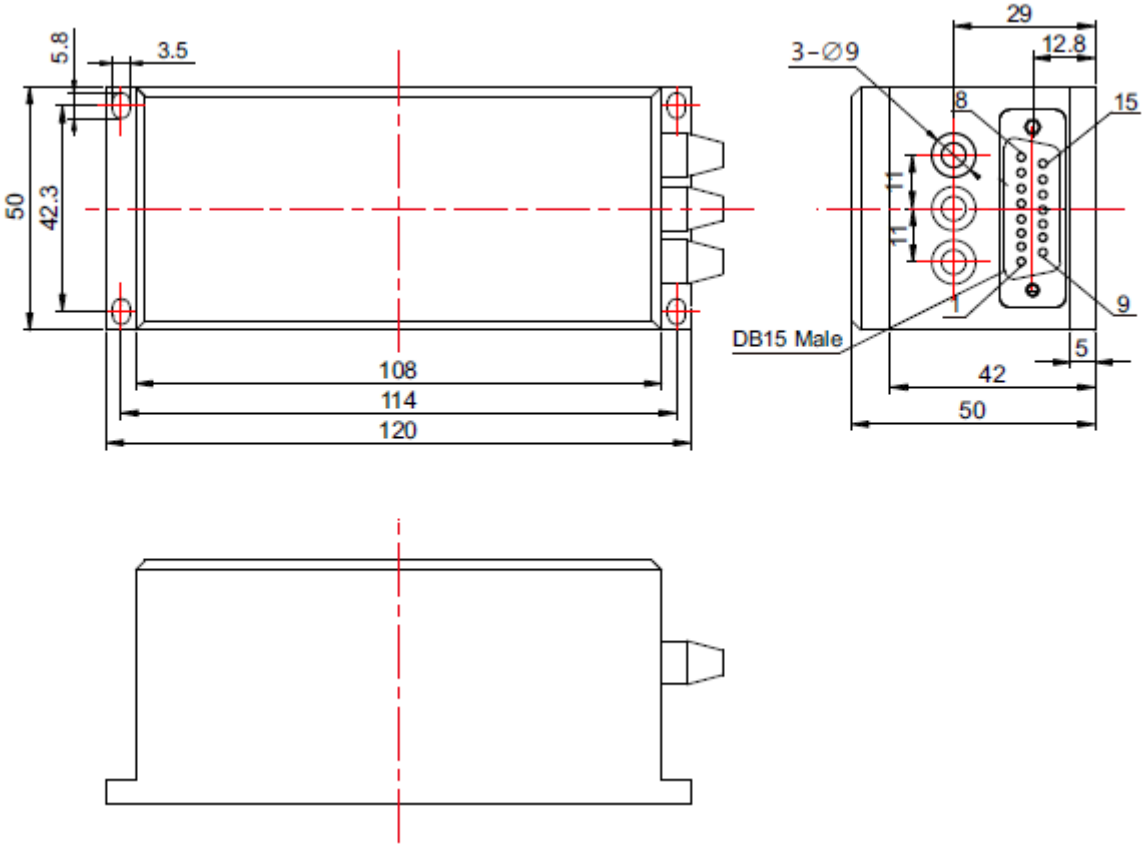

1×N（17≤N≤32） Type B: 114x110x32

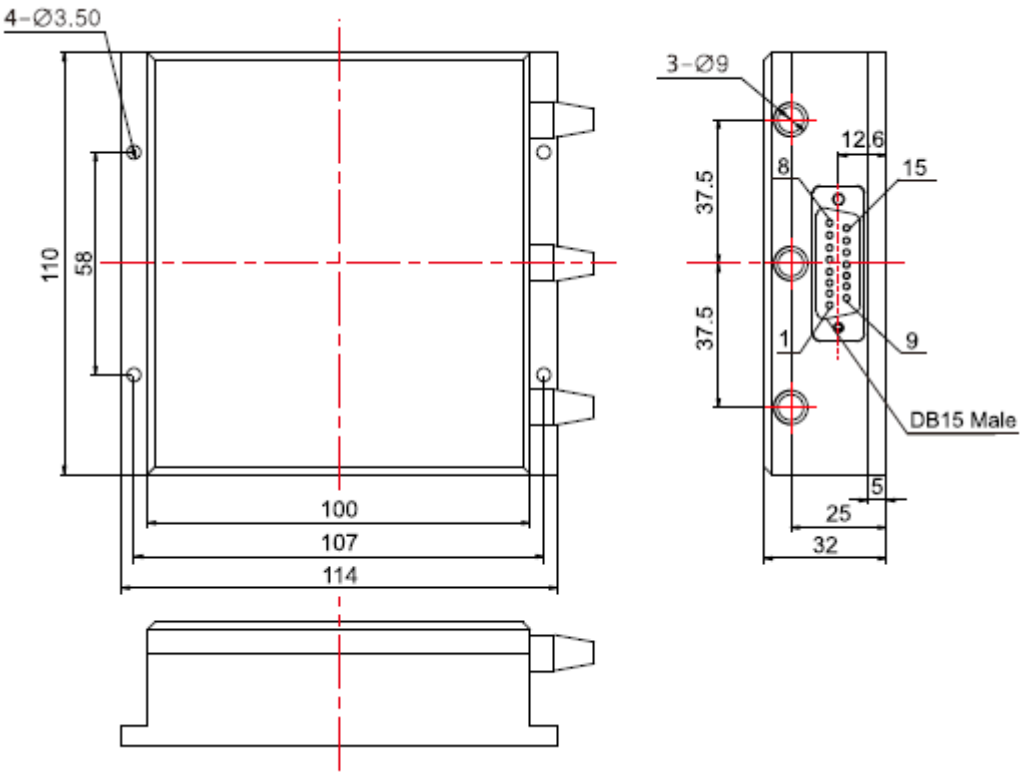

1×N（17≤N≤32） Type C: 150x76x60

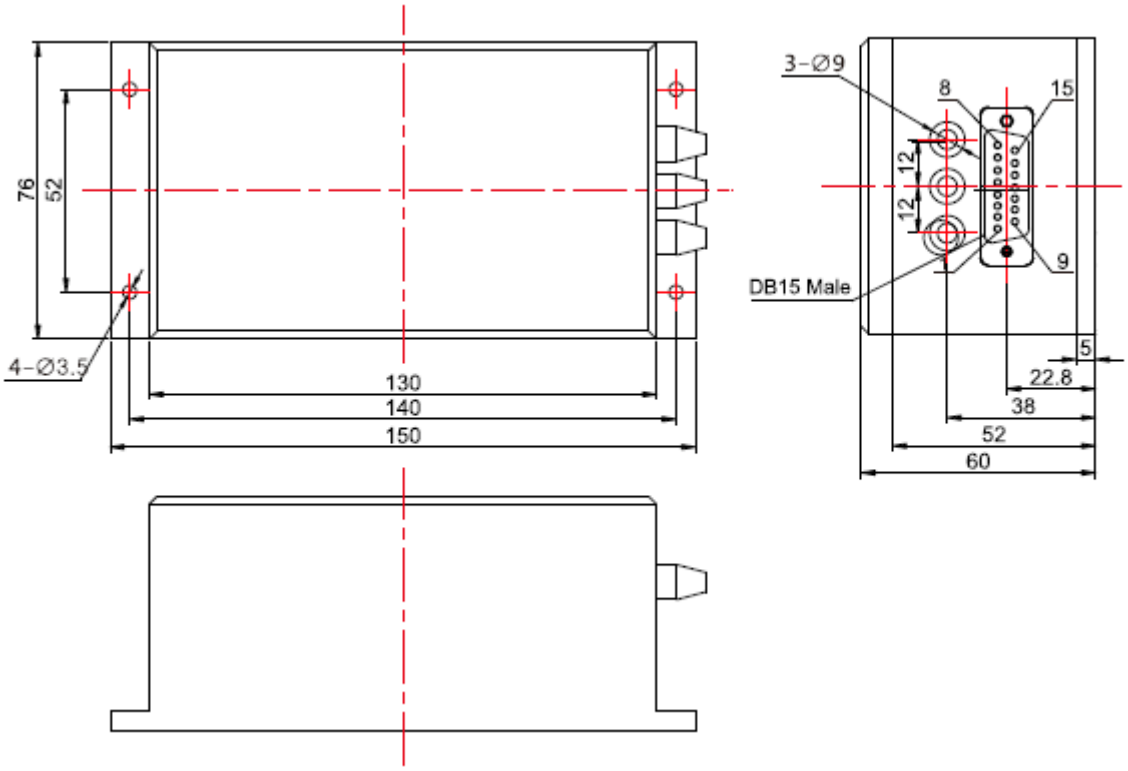

1×N（33≤N≤64）：150×90×78

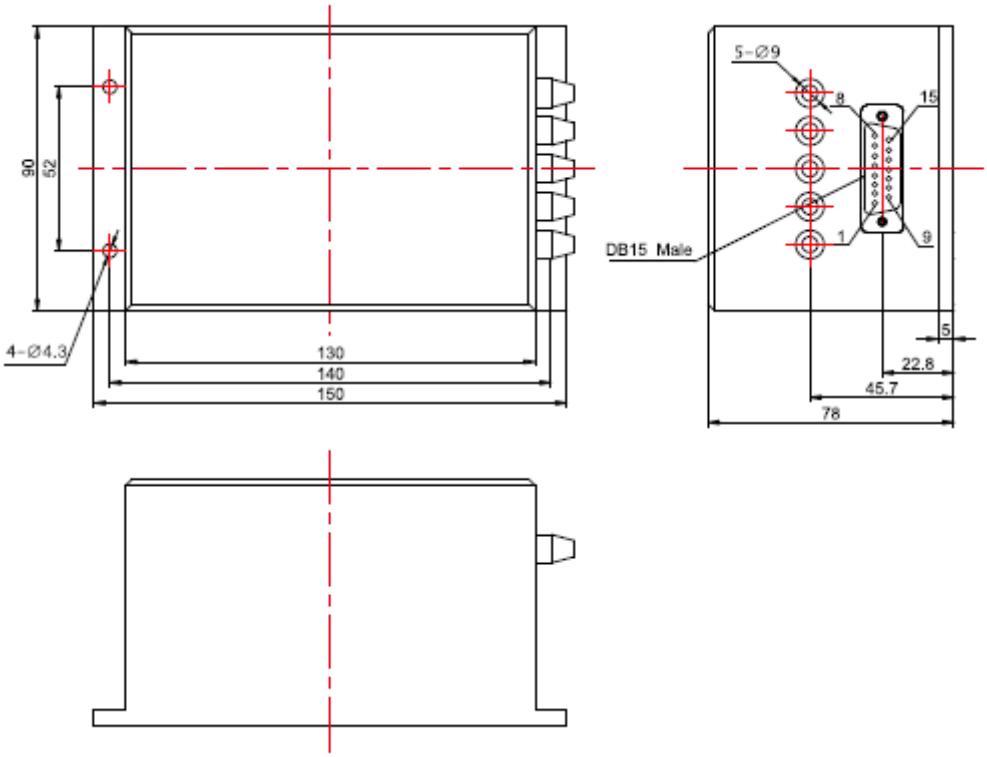

1×N（65≤N≤128）： 172×150×78

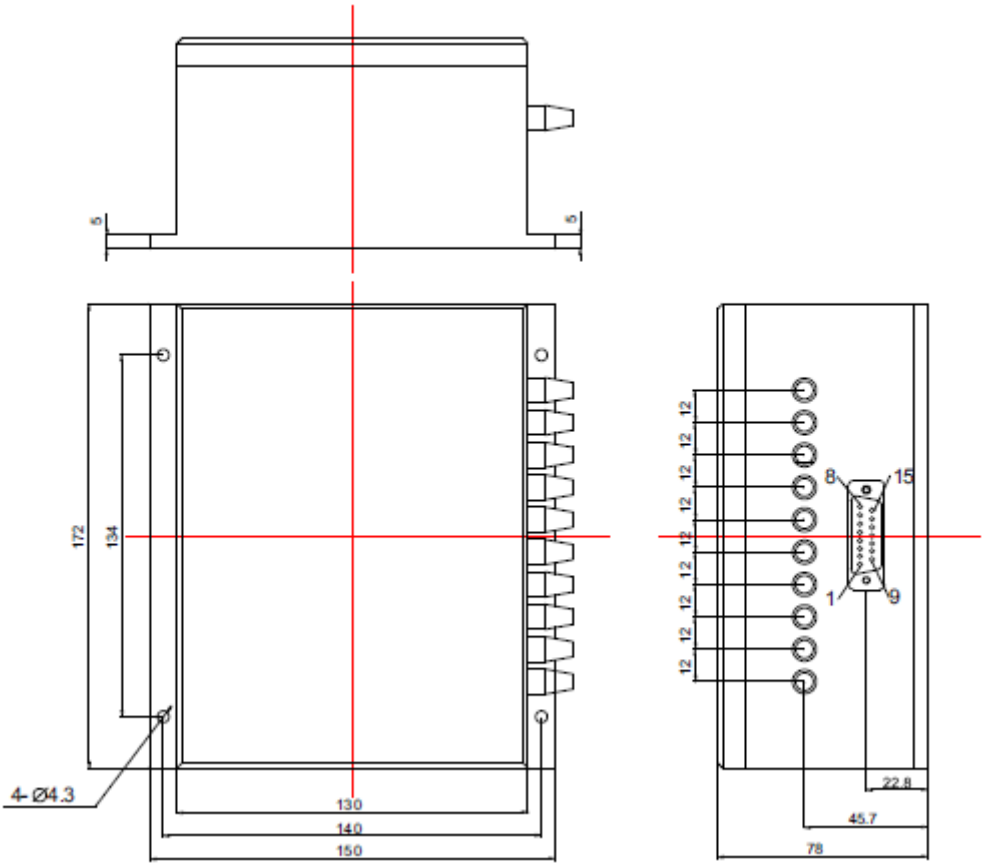

Order information HC - FSW-1×N-A-B-C-D-E-F

N	A	B	C	D	E
channel number	Optical fiber specification	Working wavelength	Optical fiber diameter	degree of long (Contain the connection head)	Connect the head
1 ~ 128	SM: SM, 9/125 M5: MM, 50/125 M6: MM, 62.5/125	850: 850nm 1310: 1310nm 1550: 1550nm 1310/1550:1310/1550nm X: other	90: 900um 20: 2.0mm 30: 3.0mm X: Others	05: 0.5m±5cm 10: 1.0m±5cm 15: 1.5m±5cm X: Others	OO:None FP: FC/PC FA: FC/APC SP: SC/PC SA: SC/APC LP: LC/PC LA: LC/APC X: Others

F（Size code）	Applicable models	Overall dimensions（mm）
1	1XN (2<N≤16)	Type A:120×40×32
2	1XN (2<N≤16)	Type B: 135×60×35
3	1XN (2<N≤16)	Type C: 135×40×32
4	1×N (17≤N≤32)	Type A:120×50×50
5	1×N (17≤N≤32)	Type B: 114x110x32
6	1×N (17≤N≤32)	Type C: 150x76x60

7	1×N（33≤N≤64）	150×90×78
8	1×N（65≤N≤128）	172×150×78