Features

- Wide Wavelength Range
- Low Crosstalk
- High Stability, High Reliability
- Epoxy-free on Optical Path

Applications

- R&D in Laboratory
- System Monitoring
- OADM
- OXC

FSW-4×4-SM-L-1310/1550-90-05-FA Optical Switch is an ideal component for OADM，OXC，system monitoring and protection. With compact package, it can be easy to integrate into a high density optical communication system.

Specifications

Parameters	Unit	FSW-4×4-SM-L-1310/1550-90-05-FA
Wavelength Range	nm	1260 ~ 1650
Test Wavelength	nm	1310 / 1550
Insertion Loss	dB	≤2.5
Return Loss	dB	SM ≥ 50
Crosstalk	dB	SM ≥ 55
PDL	dB	≤ 0.15
WDL	dB	≤ 0.35
Repeatability	dB	≤ ±0.05
Power Supply	V	5.0 ± 5%
Durability	Cycles	≥ 10 Million
Switching Time	ms	≤8
Optical Power	mW	≤500
Switch type		latching
Operating Temperature	℃	-5 ~ +70
Storage Temperature	℃	-40 ~ +85
Relative Humidity	%	5 ~ 95
Dimension	mm	(L)115×(W)98×(H)15 ±0.2

Optical Route

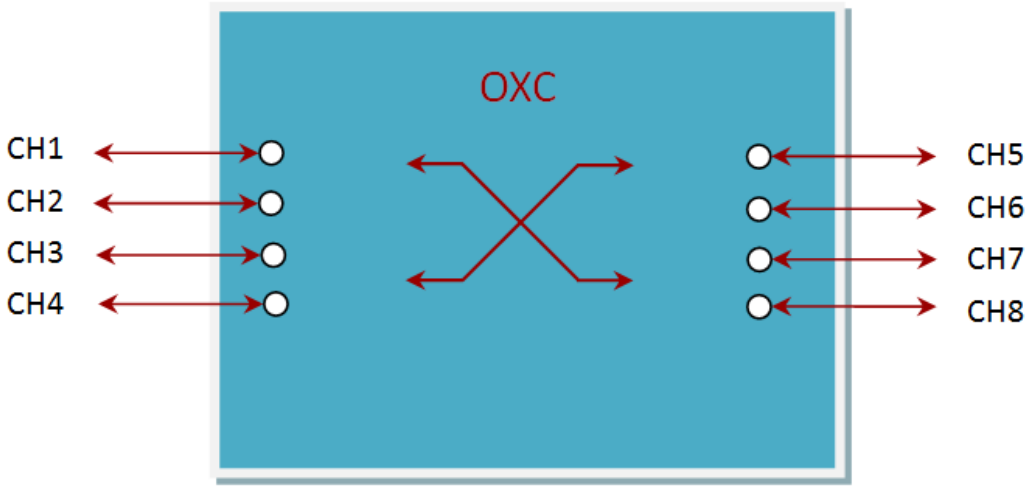

Dimension(mm)

Top View

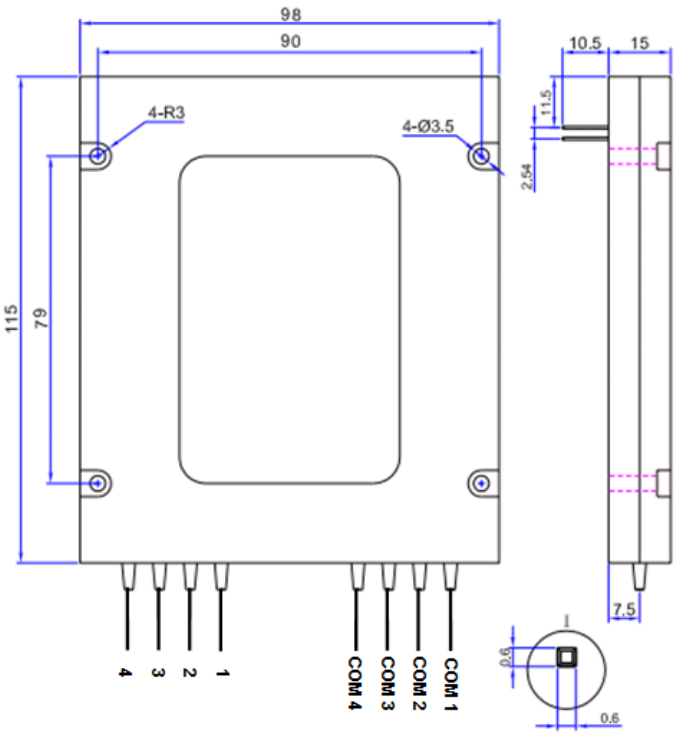

Bottom Vie

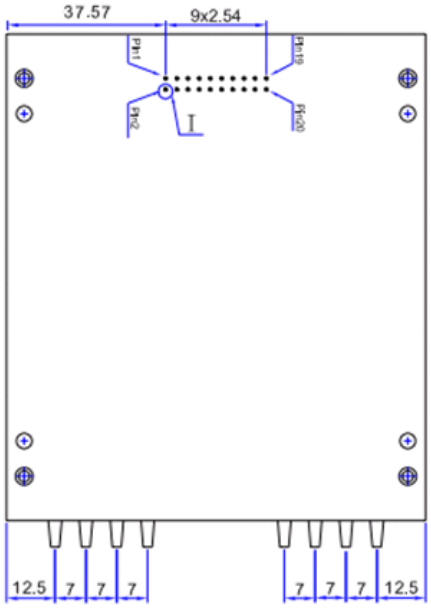

Pin Configurations

Pin No.	Signal Name	I / O	Description
1	1D0	Input	TTL, COM 1 Channel selection bit 0
2	1D1	Input	TTL, COM 1 Channel selection bit 1
3	2D0	Input	TTL, COM 2 Channel selection bit 0
4	2D1	Input	TTL, COM 2 Channel selection bit 1
5	/EN	Input	Channel Selection Enabled.
6	RST	Input	Reset
7	VCC	Input	5.0±5% VDC Power Supply (max 250mA).
8	GND	Input	Ground
9	3D0	Input	TTL, COM 3 Channel selection bit 0
10	3D1	Input	TTL, COM 3 Channel selection bit 1
11	4D0	Input	TTL, COM 4 Channel selection bit 0
12	4D1	Input	TTL, COM 4 Channel selection bit 1
13	1S0	Output	TTL, COM 1 Switch status output bit 0
14	1S1	Output	TTL, COM 1 Switch status output bit 1
15	2S0	Output	TTL, COM 2 Switch status output bit 0
16	2S1	Output	TTL, COM 2 Switch status output bit 1
17	3S0	Output	TTL, COM 3 Switch status output bit 0
18	3S1	Output	TTL, COM 3 Switch status output bit 1
19	4S0	Output	TTL, COM 4 Switch status output bit 0
20	4S1	Output	TTL, COM 4 Switch status output bit 1

Switch Status

Input		Active Channel				Output
/EN	1D1,1D0_2D1,2D0_3D1,3D0_4D1,4D0					1S1,1S0_2S1,2S0_3S1,3S0_4S1,4S0
0	00_01_10_11	COM 1→1	COM 2→2	COM 3→3	COM 4→4	00_01_10_11
	00_01_11_10			COM 3→4	COM 4→3	00_01_11_10
	00_10_01_11		COM 2→3	COM 3→2	COM 4→4	00_10_01_11
	00_10_11_01			COM 3→4	COM 4→2	00_10_11_01
	00_11_01_10		COM 2→4	COM 3→2	COM 4→3	00_11_01_10
	00_11_10_01			COM 3→3	COM 4→2	00_11_10_01
	01_00_10_11	COM 1→2	COM 2→1	COM 3→3	COM 4→4	01_00_10_11
	01_00_11_10			COM 3→4	COM 4→3	01_00_11_10
	01_10_00_11		COM 2→3	COM 3→1	COM 4→4	01_10_00_11
	01_10_11_00			COM 3→4	COM 4→1	01_10_11_00
	01_11_00_10		COM 2→4	COM 3→1	COM 4→3	01_11_00_10
	01_11_10_00			COM 3→3	COM 4→1	01_11_10_00
	10_00_01_11	COM 1→3	COM 2→1	COM 3→2	COM 4→4	10_00_01_11
	10_00_11_01			COM 3→4	COM 4→2	10_00_11_01
	10_01_00_11		COM 2→2	COM 3→1	COM 4→4	10_01_00_11
	10_01_11_00			COM 3→4	COM 4→1	10_01_11_00
	10_11_00_01		COM 2→4	COM 3→1	COM 4→2	10_11_00_01
	10_11_01_00			COM 3→2	COM 4→1	10_11_01_00
	11_00_01_10	COM 1→4	COM 2→1	COM 3→2	COM 4→3	11_00_01_10
	11_00_10_01			COM 3→3	COM 4→2	11_00_10_01
	11_01_00_10		COM 2→2	COM 3→1	COM 4→3	11_01_00_10
	11_01_10_00			COM 3→3	COM 4→1	11_01_10_00
	11_10_00_01		COM 2→3	COM 3→1	COM 4→2	11_10_00_01
	11_10_01_00			COM 3→2	COM 4→1	11_10_01_00
1	x	Hold				Hold
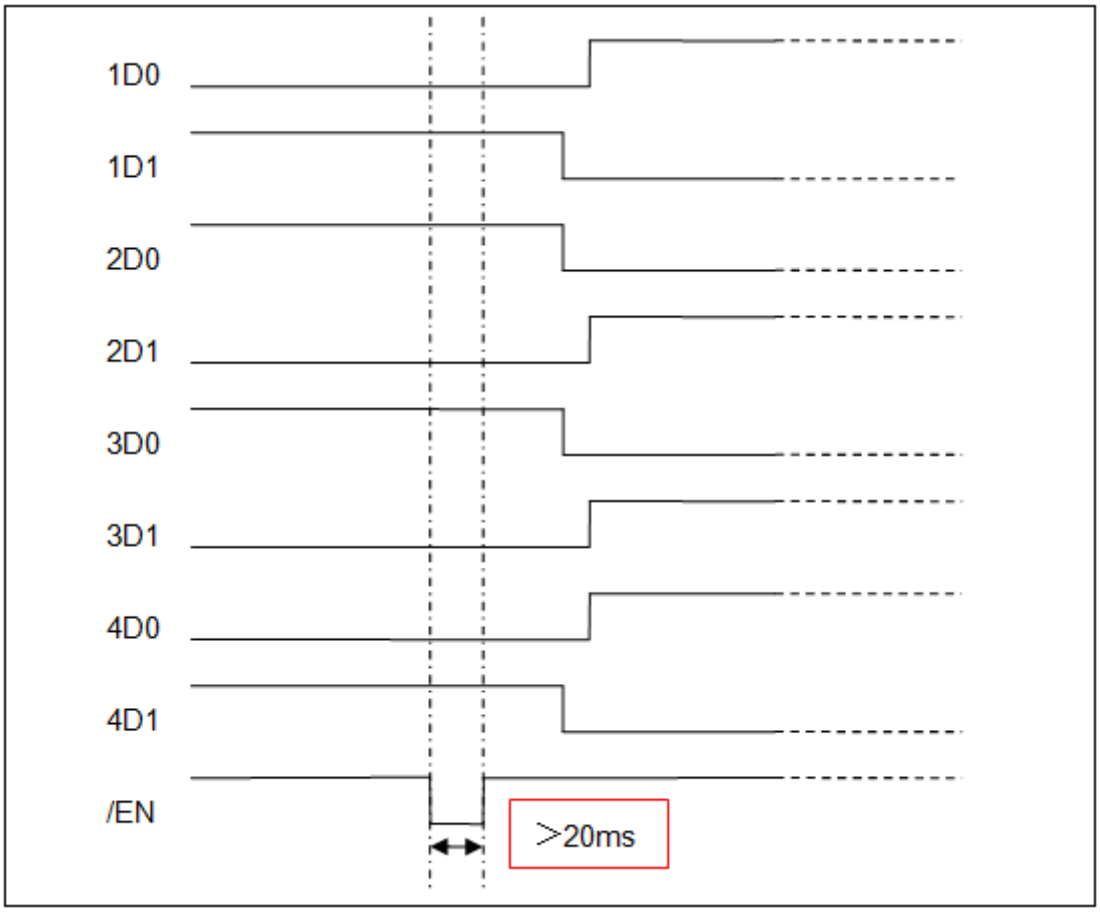
Switch Status