Balanced Photodetector Module

----HC-BPRM Series

Product introduction

HC-BPRM series balanced photodetector module integrates two matched high-linearity analog PIN detectors and a low-noise broadband transimpedance amplifier, featuring high gain, high sensitivity, DC-coupled output and high common-mode rejection ratio, which can effectively reduce the common-mode noise of the input light and improve the signal-to-noise ratio of the system. The power supply of the module is positive 12 V, the input optical interface can select optical fiber interface or space incidence, and the electrical signal is output from the SMA port. The module is mainly used in the fields of nanosecond optical pulse detection, laser radar, optical fiber coherent tomography and optical fiber sensing system.

Product features

- Spectral range 400 ~ 1700nm
- 3dB bandwidth multiple options
- Optional with output monitoring
- Response Time Min. <0.2ns
- CMRR > 30dB
- Low noise
- DC 12V single power supply
- Compact 47x42x20mm
- Can be customized

Scope of application

- Ns optical pulse detection
- Laser radar
- Brillouin optical fiber sensing system
- ∅ - OTDR
- Optical coherence tomography (OCT)

Optional

- Photosensitive surface
- Bandwidth
- Gain
- Coupling mode

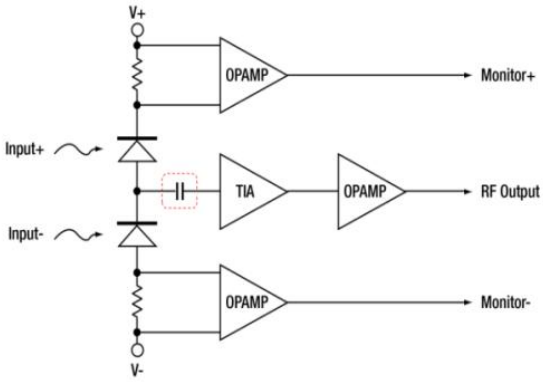

HC Optical Sci Tech Co., Ltd

Technical parameters

silicon balanced photodetector module			
Parameter		HC-BPRM-BW-S-FA/FS	
Detector type		Si / PIN	
Optical input		Free Space or FC/APC	
Wavelength range		400-1100nm	
Peak responsivity		0.5 A/W @ 905 nm	
Photosensitive surface diameter		1.2mm	0.5 mm
Common Mode Rejection Ratio (CMRR)		>25 dB (typ. >30 dB)	
Bandwidth (3dB)	RF OUTPUT	10MHz	350MHz
Conversion gain @ high impedance	RF OUTPUT	26x103V/W	5x 103 V/W
Rise time	RF OUTPUT	30ns	1ns
Saturated optical power – Out of balance	RF OUTPUT	115uW	0.76mW
Saturated optical power – Balance	RF OUTPUT	5mW	
Coupling mode	RF OUTPUT	DC (AC optional)	
Output impedance	RF OUTPUT	50Ω	
Equivalent noise power NEP	RF OUTPUT	7.0 pW/√Hz	42.7 pW/√Hz
Total Output Noise Voltage *	RF OUTPUT	<0.3mVRMS	<4mVRMS

InGaAs balanced photodetector module (fiber input)							
Parameter		HC-BPRM-BW-I--FA					
Detector type		InGaAs / PIN					
Optical input		FC/APC					
Wavelength range		800-1700nm					
Peak responsivity		0.9A/W @ 1550 nm					
Photosensitive surface diameter		75μm					
Bandwidth (3dB)	RF OUTPUT	10MHz	75MHz	200MHz	400MHz	500MHz	30K~1.5GHz
Conversion gain @ high impedance	RF OUTPUT	51x 103 V/W	250x 103 V/W	40 x 103 V/W	10x 103 V/W	2x 103 V/W	2x 103 V/W
Rise time	RF OUTPUT	30ns	4.5ns	1.8ns	0.9ns	0.6ns	0.2ns
Common Mode Rejection Ratio (CMRR)	RF OUTPUT	>30 dB	>30 dB	>25 dB			

HC Optical Science and Tech Co., Ltd

Saturated Light Power	Out of balance		58.8uW	12.5uW	97.5uW	0.38mW	1mW	1mW
	Balance		5mW					
Coupling mode			DC					AC only
Output impedance			50Ω					
Equivalent noise power NEP			4.1pW/√Hz	6.9pW/√Hz	11.2pW/√Hz	17.9 pW/√Hz	15pW/√Hz	12.9pW/√Hz
Total Output Noise Voltage *			<0.3mVRMS	<15mVRMS	< 6.3mVRMS	<4mVRMS	<1mVRMS	<1mVRMS

InGaAs balanced photodetector module (spatial light input)		
Parameter		HC-BPRM-BW-I-FS
Detector type		InGaAs / PIN
Optical input		Free Space
Wavelength range		800-1700nm
Peak responsivity		0.9A/W @ 1550 nm
Photosensitive surface diameter		500μm
Bandwidth (3dB)	RF OUTPUT	75MHz
Conversion gain @ high impedance		10x 103 V/W
Rise time		4.7ns
Common Mode Rejection Ratio (CMRR)		>30 dB
Saturated optical power	Out of balance	0.38mW
	Balance	5mW
Coupling mode		DC
Output impedance		50Ω
Equivalent noise power NEP		54.4 pW/√Hz
Total Output Noise Voltage *		< 2.1 mVRMS

HC Optical Science and Tech Co., Ltd.

General parameters

Parameter		Typical value	Remark
RF out terminal	Output electrical signal interface	SMA(Female)	
	Output DC Bias	+/-3mV	No input
	Maximum output voltage	±3.8V	High resistance
		±1.9V	50Ω
Monitoring terminal (optional)	Bandwidth	DC-1MHz	
	Output voltage	0-5V	@ High resistance
	Gain	10KV/W	@1550nm
	Resistance	100Ω	
	Saturated optical power	0.5mW	@ High resistance
Power connector		Aviation plug	2P or 4P
Power supply		DC 12V	Operating voltage
		<100mA	Operating current
Photodamage threshold		10mW	CW or peak power
Operating temperature		-20~65℃	

Characteristic curve

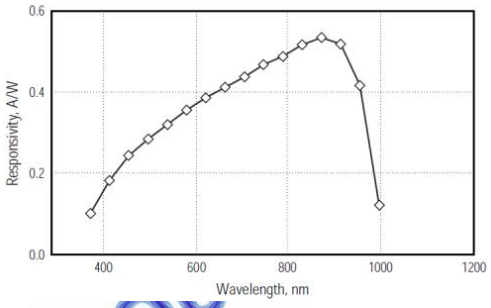

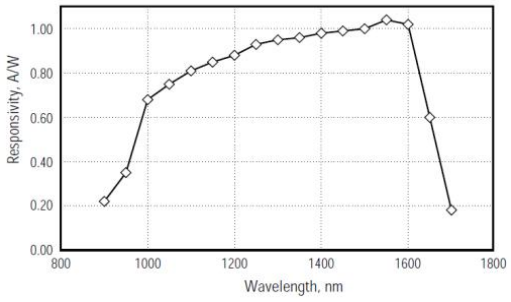

Typical spectral response

HC Optical Science and Tech Co., Ltd

Mechanical dimensions in mm

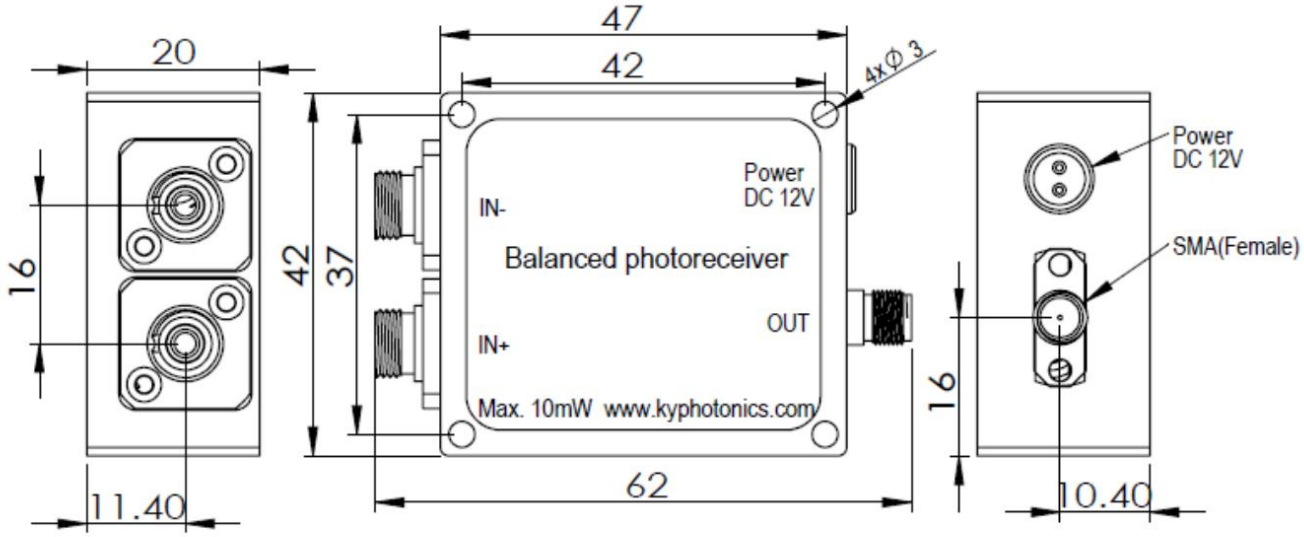

Fiber optic interface

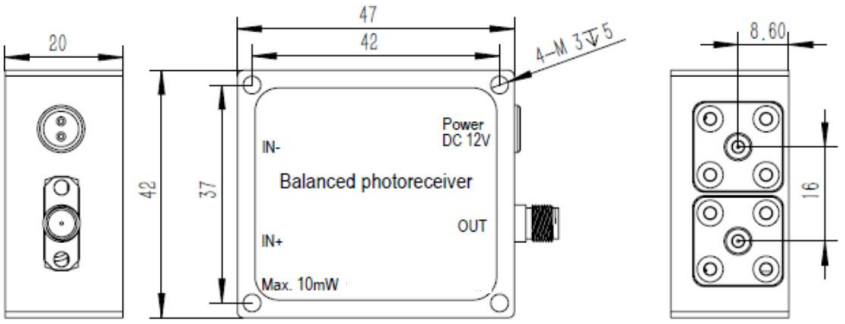

Space optical interface (with adapter board to adapt to M4 optical connector)

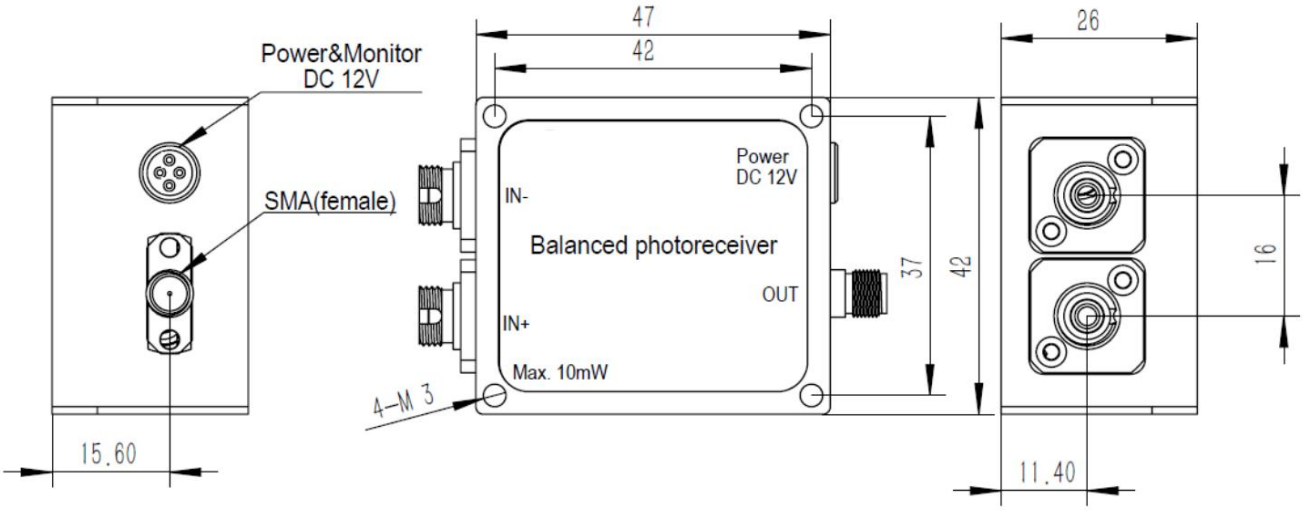

Optical interface (with output monitoring)

PIN#	COLOR	FUNCTION
1	Red	+12V Power Supply
2	Black	GND

PIN#	COLOR	FUNCTION
1	Red	+12V Power Supply
2	Black	GND
3	White	Monitor input +
4	Yellow	Monitor input-

Power supply interface (without monitoring output and with monitoring output)

Ordering Information HC-BPRM-BW-S/I-FA/FS-XX

BW — Operating bandwidth

S/I --- S: Si; I: InGaAs

FA/FS --- FA: FC/APC; FS: Free Space

XX--Other special requirements